PAGE	412

BY	CHK	REVISION RECORD MODIFICATIONS	DATE	REV.
ALLEN		RELEASE TO PRODUCTION	2007,9,12	1.0

MATERIAL & FINISH
HOUSING: Glass Fiber, PBT. UL94V-0, BLACK
CONTACT: 0.45mm thickness phosphor bronze,
Gold plated over Nickel on contact area,
Tin plated over Nickel on solder area.

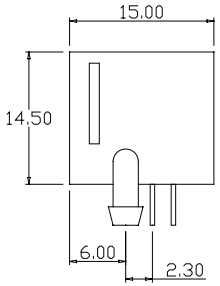

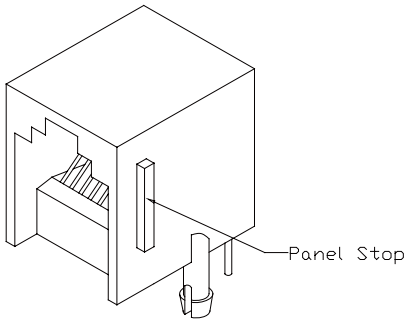

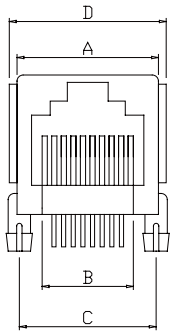

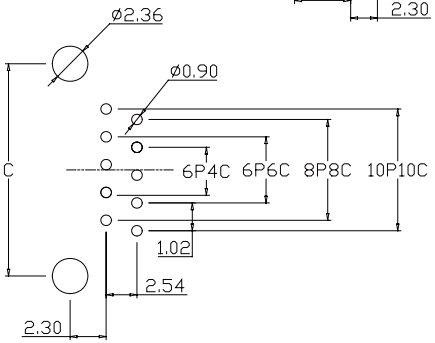

Recommended PCB Layout
(PCB TOLERANCE±0.05)

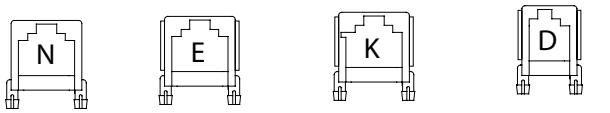

Without Ear | With Ear | Without keyway (8p & 10P only) | Side latch (6P only)

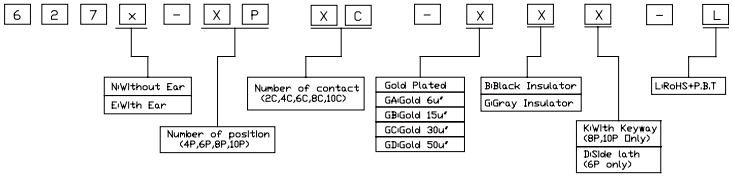

Position	contact	A	B	C	D
4P	4C	10.00	7.85	10.00	12.00
(6P)4P	4C	12.20	7.85	12.00	14.20
6P	2C/4C/6C	12.20	9.90	12.00	14.20
8P	8C	15.00	11.85	15.00	16.90
10P	10C	15.00	11.85	15.00	16.90

APPRO	CHECK	DRAWN	PART NO.	627X-XPXC-XXX-L			DESCRIPTION
			ITEM NO.				
			DRAW NO.				
			UNIT	mm	SCALE	no	
			TOLER		NO.		

Tel: 0769 22020068 Fax: 0769 22020069 E-mail: sales@vigortec.com